RIKEN

FOR SEMICONDUCTOR PROCESSING GASES

INTELLIGENT GAS DETECTOR

GD-77 series

Toxic gases	GD-K77D	3 wire 4-20mA analog transmission
	GD-K77D-NT	2 wire DC power line communication method
Hydrogen (H_2)	GD-V77D	3 wire 4-20mA analog transmission
	GD-V77D-NT	2 wire DC power line communication method
Oxygen (O_2)	GD-F77A	3 wire 4-20mA analog transmission 4-20mA
NF_3	GD-K77DG	3 wire 4-20mA analog transmission
	GD-K77DG-NT	2 wire DC power line communication method
TEOS	GD-S77DG	3 wire 4-20mA analog transmission
	GD-S77DG-NT	2 wire DC power line communication method

- Compact smart detector
- Microprocessor operation

- Digital LED display
- No tools required for maintenance

Global Standard Network (DeviceNet, LonWorks and CC-Link) available as options

Features

- Digital display (LED) for gas concentration readout.
- Calibration and other sensor information stored in sensor memory.
- Trend graph for alarm evidence.
- Self-diagnostic functions by microprocessor.
- Easy replacement of pump and sensor (less than one minute).
- Two alarm levels, trouble alarm, plus relay outputs.
- Maintenance capability by remote PC.
- Automatic flow adjustment.

ISO 9001 KHK ISO 9000 95QR·007

ISO 14001 KHK ISO 14000 97ER·005

RIKEN FINE RIKEN KEIKI

SYSTEM CONFIGURATION

1 ANALOG TRANSMISSION (GD-K77D, GD-V77D, GD-F77A)

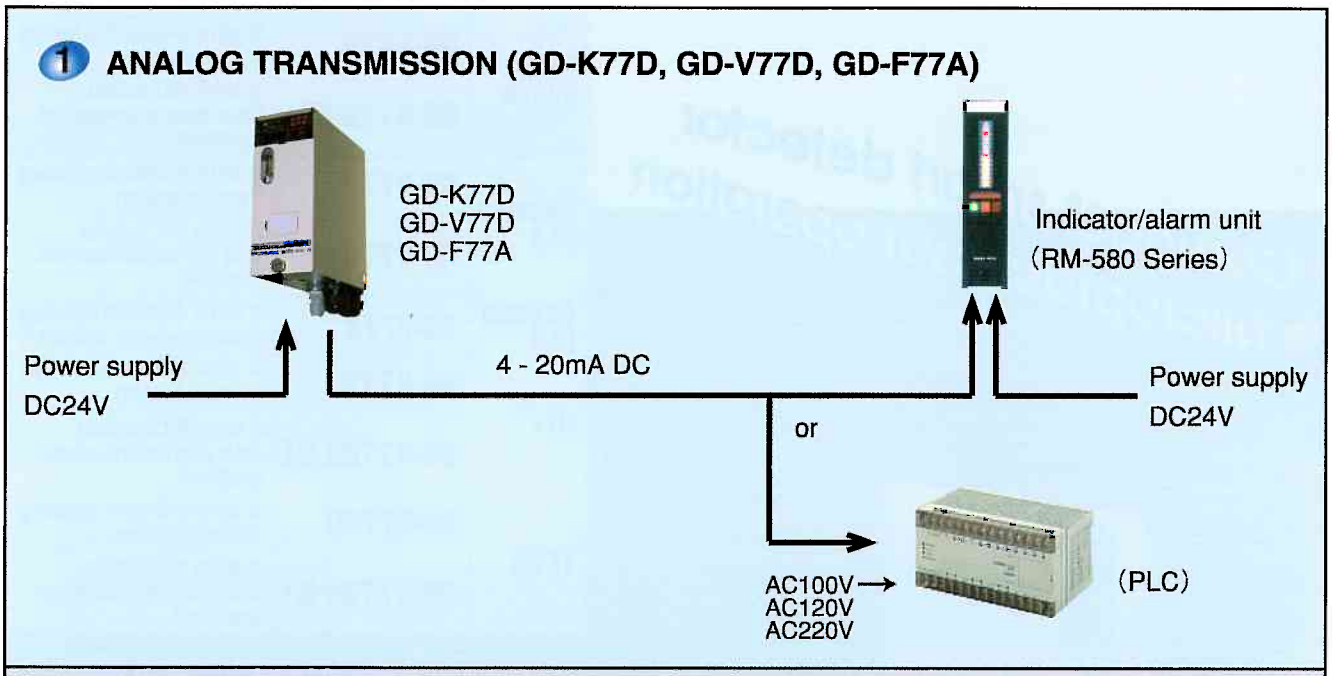

2 TWO WIRE TYPE DIGITAL TRANSMISSION

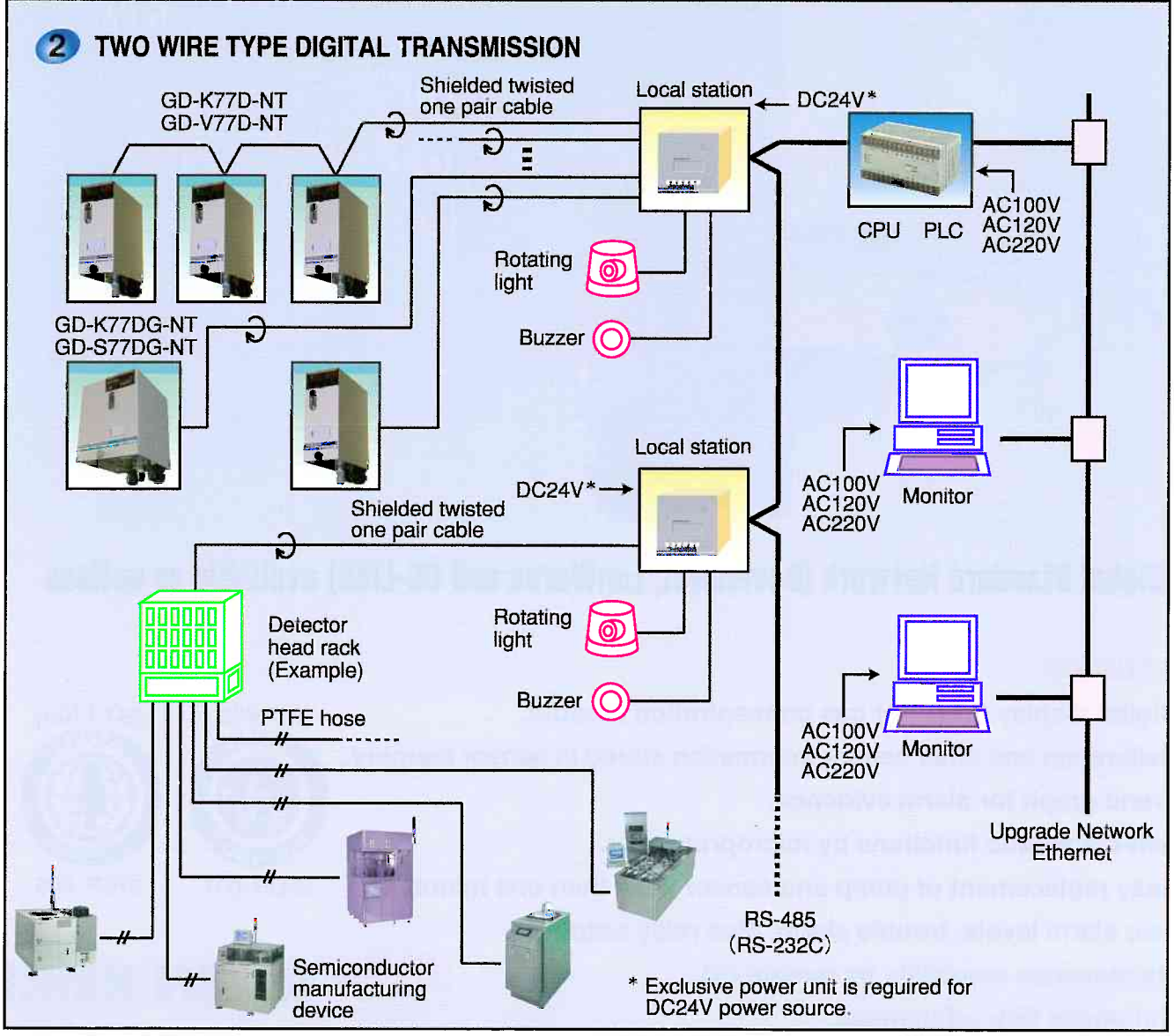

* Exclusive power unit is reguired for DC24V power source.

SYSTEM CONFIGURATION

3 ANALOG TRANSMISSION (GD-K77DG, GD-S77DG)

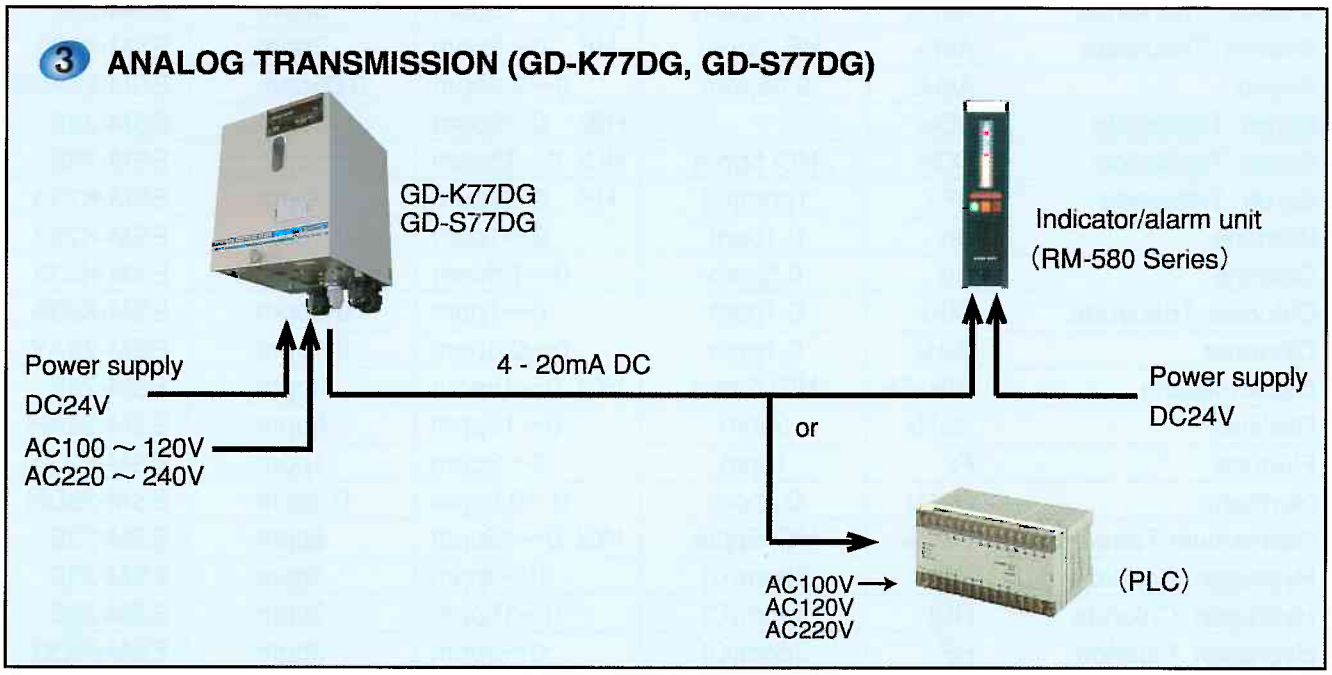

4 SPECIFICATIONS

Model	GD-K77D	GD-K77D-NT
Detection principle	Electrochemical cell	
Detection method	Sample-drawing type	
Detectable gas and measuring range	Refer to the list 〔DETECTABLE GASES〕	
Signal transmission	Analog transmission (4-20mA)	Two wire digital transmission
Gas concentration display	Digital LED display, 4 digit	
Gas alarm	Two alarm levels : 1st alarm (Yellow LED) : 2nd alarm (Red LED)	
Dry outputs for remote alarm	Dry contact for each 1st alarm, 2nd alarm and trouble alarm (NO or NC each)	
Alarm delay time	Approx 10-15 seconds when exposed to gas concentration of 1.6 times alarm level for most gases (Same as T60)	
Self diagnosis function	Trouble, low flow, system failure, communication error	
Operating conditions	0-40℃, 30-85% R.H.	
Power requirements	24 VDC ± 10%, Approx 10W	
Applicable cable	Shielded cable 3C. 1.25 sq (18 gage)	Shielded twisted one pair cable 1.25 sq (18 gage)
Structure, painting colour	Wall mounting, Munsel No. 2.5Y9/2 (Beige)	
Outer dimensions, weight	Approx 70(W) × 170(H) × 153(D)mm , Approx 2 kg Approx 2.8"(W) × 6.7"(H) × 6.0"(D) , Approx 4.4lb.	
Applicable tubing for outer connection	O. D. ϕ6-1t PTFE tubing. (Provided with P. P. coupling)	

● Specifications subject to change without notice.

5 OUTER DIMENSIONS

GD-K77D
GD-K77D-NT
GD-V77D
GD-V77D-NT
GD-F77A

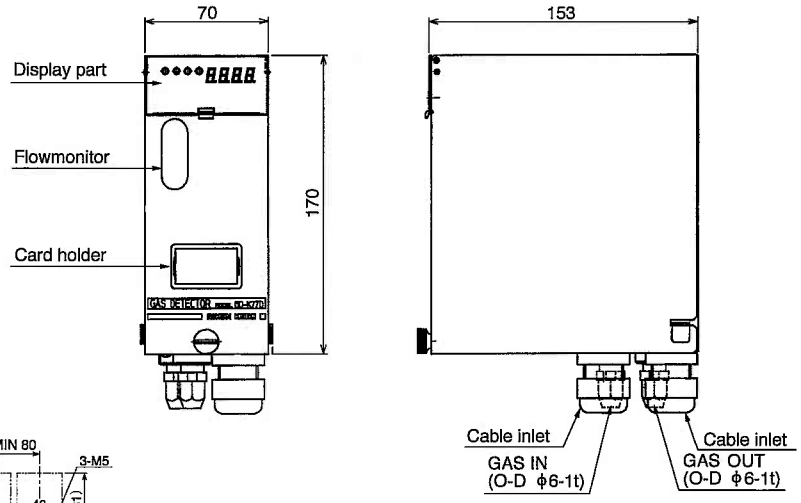

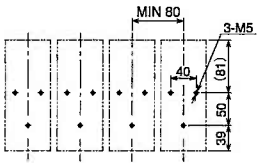

INSTALLATION DIMENSIONS

Keep 80mm (Min.) mounting pitch when more than two detectors are installed in series

6 SPECIFICATIONS

Model	GD-V77D	GD-V77D-NT	GD-F77A	GD-F77A-NT
Detection principle	Semiconductor cell		Electrochemical (Galvanic) cell	
Detection method	Sample-drawing type		Diffusion sampling type	
Detectable gas and measuring range	H_2, 0-2000ppm/CH_2F_2, 0-500ppm		O_2, 0-25%vol	
Signal transmission	Analog transmission (4-20mA)	Two wire digital transmission	Analog transmission (4-20mA)	Two wire digital transmission
Gas concentration display	Digital LED display, 4 digit			
Gas alarm	Two alarm levels : 1st alarm (Yellow LED) : 2nd alarm (Red LED)		18%vol (Yellow/Red LED) (Two alarm levels available)	
Dry outputs for remote alarm	Dry contact for each 1st alarm, 2nd alarm and trouble alarm (NO or NC each)		Dry contact for each low alarm and trouble alarm (NO or NC each)	
Alarm delay time	Approx 30 seconds when exposed to gas concentration of 1.6 times alarm level (Same as T60)		Approx 5 seconds when exposed to O_2, 10%vol.	
Self diagnosis function	Trouble, low flow, system failure, communication error		Trouble, system failure, communication error	
Operating conditions	0-40℃, 30-85% R.H.			
Power requirements	24 VDC ± 10%, Approx 13W		24 VDC ± 10%, Approx 9W	
Applicable cable	Shielded cable 3C.1.25 sq (18 gage)	Shielded twisted one pair cable 1.25 sq (18 gage) (KPEVS 1P 1.25sq)	Shielded cable 3C.1.25 sq (18 gage)	Shielded twisted one pair cable 1.25 sq (18 gage) (KPEVS 1P 1.25sq)
Structure, painting colour	Wall mounting, Munsel No. 2.5Y9/2 (Beige)			
Outer dimensions, weight	Approx 70(W) × 170(H) × 153(D) mm, Approx 2 kg Approx 2.8"(W) × 6.7"(H) × 6.0"(D) , Approx 4.4lb.			
Applicable tubing for outer connection	O. D. φ6-1t PTFE tubing. (Provided with P. P. coupling)		———	

● Specifications subject to change without notice.

NF_3/TEOS GAS DETECTOR HEAD

The Riken Model GD-K77DG and GD-K77DG-NT use pyrolysis to oxidize NF_3 (Nitrogen trifluoride); which is then detected as NO_2 with an electrochemical sensor. The Model GD-S77DG and S77DG-NT also use pyrolysis to oxidize TEOS (Tetraethoxysilane). The resulting SiO_2 (Silicon dioxide) is then detected in a ionization chamber.
This advanced method offers distinct advantages compared to conventional TEOS detection (Hydrolysis/electrochemical sensor): long sensor life and virtually no interference from other gases.

7 OUTER DIMENSIONS (GD-K77DG)

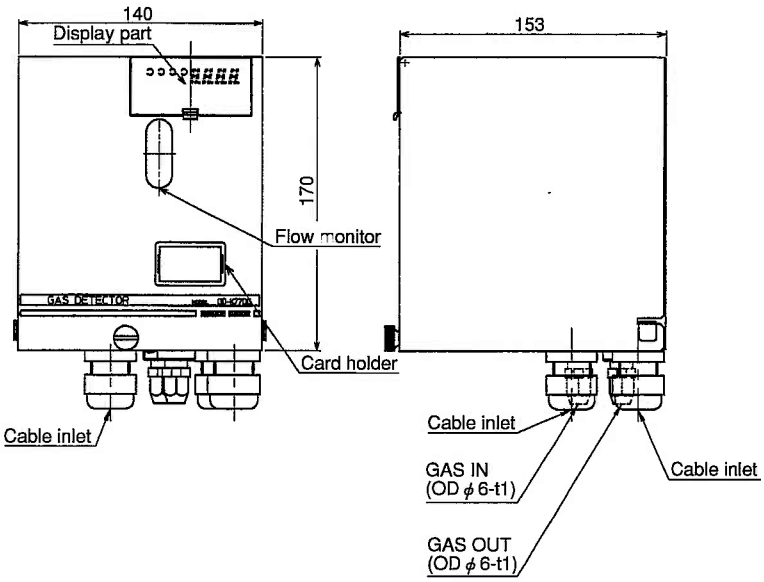

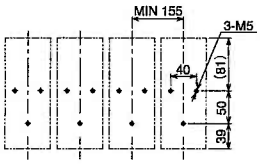

INSTALLATION DIMENSIONS

Keep 155mm (Min.) mounting pitch when more than two detectors are installed in series

8 SPECIFICATIONS

Model	GD-K77DG	GD-K77DG-NT	GD-S77DG	GD-S77DG-NT
Detection principle	Pyrolysis/electrochemical cell		Pyrolysis/ionization chamber	
Detection method	Sample-drawing type		Sample-drawing type	
Detectable gas and measuring range	**NF_3, 0-30ppm**		**TEOS, 0-15ppm**	
Signal transmission	Analog transmission (4-20mA)	Two wire digital transmission	Analog transmission (4-20mA)	Two wire digital transmission
Gas concentration display	Digital LED display, 4 digit			
Gas alarm	Two alarm levels : 1st alarm (Yellow LED) : 2nd alarm (Red LED)			
Dry outputs for remote alarm	Dry contact for each 1st alarm, 2nd alarm and trouble alarm (NO or NC each)			
Alarm delay time	Approx 30 seconds when exposed to gas concentration of 1.6 times alarm level (Same as T60)			
Self diagnosis function	Trouble, low flow, system failure, communication error			
Operating conditions	0-40℃, 30-85% R.H.			
Power requirements	24 VDC ± 10%, Approx 10W and 100 ~ 120VAC or 220 ~ 240VAC			
Applicable cable	Shielded cable 3C, 1.25 sq (18 gage)	Shielded twisted one pair cable 1.25 sq (18 gage) (KPEVS 1P 1.25sq)	Shielded cable 3C, 1.25 sq (18 gage)	Shielded twisted one pair cable 1.25 sq (18 gage) (KPEVS 1P 1.25sq)
Structure, painting colour	Wall mounting, Munsel No. 2.5Y9/2 (Beige)			
Outer dimensions, weight	Approx 140(W) × 170(H) × 153(D)mm , Approx 3.2 kg Approx 5.6"(W) × 6.7"(H) × 6.0"(D), Approx 7.0 lb		Approx 140(W) × 170(H) × 193(D)mm , Approx 3.2 kg Approx 5.6"(W) × 6.7"(H) × 7.7"(D) , Approx 7.0 lb	
Applicable tubing for outer connection	O. D. ϕ 6-1t PTFE tubing. (Provided with P. P. coupling)			

● Specifications subject to change without notice.

DETECTABLE GASES

Name of gases		ACGIH TLV-TWA	measuring range	Preset alarm level (Standard)	Sensor
Ammonia	NH_3	25ppm	0～75ppm	25ppm	ESM-23R
Antimony Pentachloride	$SbCl_5$	HCl 5ppm	HCl 0～15ppm	5ppm	ESM-23E
Arsenic Pentachloride	$AsCl_5$	HCl 5ppm	HCl 0～15ppm	5ppm	ESM-23E
Arsenic Pentafluoride	AsF_5	HF 3ppm	HF 0～9ppm	3ppm	ESM-K233
Arsenic Trichloride	$AsCl_3$	HCl 5ppm	HCl 0～15ppm	5ppm	ESM-23E
Arsenic Trifluoride	AsF_3	HF 3ppm	HF 0～9ppm	3ppm	ESM-K233
Arsine	AsH_3	0.05ppm	0～0.2ppm	0.05ppm	ESM-23AHS
Boron Tribromide	BBr_3		HBr 0～9ppm	3ppm	ESM-23E
Boron Trichloride	BCl_3	HCl 5ppm	HCl 0～15ppm	5ppm	ESM-23E
Boron Trifluoride	BF_3	1ppm(C)	HF 0～9ppm	3ppm	ESM-K233
Bromine	Br_2	0.1ppm	0～1ppm	0.1ppm	ESM-K233
Chlorine	Cl_2	0.5ppm	0～1.5ppm	0.5ppm	ESM-K233
Chlorine Trifluoride	ClF_3	0.1ppm	0～1ppm	0.2ppm	ESM-K233
Diborane	B_2H_6	0.1ppm	0～0.3ppm	0.1ppm	ESM-23AY
Dichlorosilane	SiH_2Cl_2	HCl 5ppm	HCl 0～15ppm	5ppm	ESM-23E
Disilane	Si_2H_6	5ppm	0～15ppm	5ppm	ESM-23AH
Fluorine	F_2	1ppm	0～3ppm	1ppm	ESM-K233
Germane	GeH_4	0.2ppm	0～0.8ppm	0.2ppm	ESM-23DH
Germanium Tetrachloride	$GeCl_4$	HCl 5ppm	HCl 0～15ppm	5ppm	ESM-23E
Hydrogen Bromide	HBr	3ppm(C)	0～9ppm	3ppm	ESM-23E
Hydrogen Chloride	HCl	5ppm(C)	0～15ppm	5ppm	ESM-23E
Hydrogen Fluoride	HF	3ppm(C)	0～9ppm	3ppm	ESM-K233
Hydrogen Iodine	HI		0～5ppm	2ppm	ESM-23E
Hydrogen Selenide	H_2Se	0.05ppm	0～0.2ppm	0.05ppm	ESM-23SD
Hydrogen Sulfide	H_2S	10ppm	0～1ppm	0.3ppm	ESM-K23AH
Iodine	I_2	0.1ppm(C)	0～1ppm	0.3ppm	ESM-K233
Molybdenum Hexafluoride	MOF_6	HF 3ppm	HF 0～9ppm	3ppm	ESM-K233
Nitrogen Dioxide	NO_2	3ppm	0～15ppm	3ppm	ESM-23AH
Ozone	O_3	0.1ppm(C)	0～0.6ppm	0.1ppm	ESM-K239C
Phosphine	PH_3	0.3ppm	0～1ppm	0.3ppm	ESM-23AH
Phosphorus Oxychloride	$POCl_3$	0.1ppm	HCl 0～15ppm	5ppm	ESM-23E
Phosphorus Pentafluoride	PF_5	HF 3ppm	HF 0～9ppm	3ppm	ESM-K233
Phosphorus Trichloride	PCl_3	0.2ppm	HCl 0～15ppm	5ppm	ESM-23E
Phosphorus Trifluoride	PF_3	1ppm	0～10ppm	2ppm	ESM-23DH
Silane	SiH_4	5ppm	0～15ppm	5ppm	ESM-23DH/23AH
Silicone Tetrachloride	$SiCl_4$	HCl 5ppm	HCl 0～15ppm	5ppm	ESM-23E
Silicone Tetrafluoride	SiF_4	HF 3ppm	HF 0～9ppm	3ppm	ESM-K233
Sulfur Tetrafluoride	SF_4	0.1ppm	HF 0～9ppm	3ppm	ESM-K233
Tantalum Fluoride	TaF_5	HF 3ppm	HF 0～9ppm	3ppm	ESM-K233
Tin Tetrachloride	$SnCl_4$	HCl 5ppm	HCl 0～15ppm	5ppm	ESM-23E
Trichlorosilane	$SiHCl_3$	HCl 5ppm	HCl 0～15ppm	5ppm	ESM-23E
Tungsten Hexafluoride	WF_6	HF 3ppm	HF 0～9ppm	3ppm	ESM-K233

For gases not listed above, contact us or our nearest agent.

★Distributed by:

RKI INSTRUMENTS

A9812 UL REGISTERED FIRM ISO 9001:2000

33248 Central Avenue Union City, CA 94587
Toll Free: (800) 754-5165 • Phone: (510) 441-5656 • Fax: (510) 441-5650
mail4rki@rkiinstruments.com • www.rkiinstruments.com

Printed in Japan C2E-0274-020530Ⓚ